# 1074255 CUSTOM PARTS KIT ASSEMBLY INSTRUCTION MODEL NO. 424-RAF12898

| ITEM NO. | PART NO. | MODEL | DESCRIPTION | QTY. |
|---|---|---|---|---|
| 1 | 1071678 | ORB-028 | O-RING,-028,BUNA | 1 |
| 2 | 1263852 | NUS-0010 | NUT,HEX,1/4-28,SS | 1 |
| 3 | 43942 | 424-H | DIAPHRAGM PLATE | 1 |
| 4 | 1074232 | 424-J | DISC,424,BUNA | 1 |
| 5 | 44013 | 424-L2 | NORMALLY OPEN COMBO SHAFT | 1 |
| 6 | 1071689 | ORB-110TC | O-RING,-110,BUNA,TFL CTD | 1 |
| 7 | 1071695 | ORB-132 | O-RING,-132,BUNA | 1 |
| 8 | 43852 | 424-GGS | SHAFT GUIDE, 424, HEX | 1 |
| 9 | 1262436 | - | LOCTITE 565 POLYTUBE | 1 |
| 10 | 42561 | - | LUBRICANT,SILICONE,PACKET | 1 |
| 11 | 1074276 | 424-X | CENTERING NUT | 1 |
| 12 | 1074252 | 424-R | COPPER GASKET | 1 |
| 13 | 43943 | 424-DS | DIAPHRAGM PLATE | 2 |
| 14 | 1074222 | 424-FB | DIAPHRAGM,424,BUNA | 1 |
| 15 | 1074270 | 424-SS | SPRING,COMPRESSION,302 SS | 1 |
| 16 | 1071674 | ORB-020 | O-RING, 2-020,BUNA | 1 |

| REVISIONS | | | | |
|---|---|---|---|---|
| ECN | REV | DESCRIPTION | DATE | APPROVED |
| | A | INITIAL RELEASE | 7/26/1999 | MM |
| | B | ORB-028 WAS ORB-029 | 4/28/2003 | GES |
| | C | NUMBER CONVERSION | 10/28/2013 | ANH |
| 2436 | D | REDRAWN IN AQ-MATIC FORMAT, DRAWING NUMBER CHANGE, BOM UPDATE | 9/5/2024 | PMJ |

## STEP 1
(WITH ONE PIECE SHAFT)

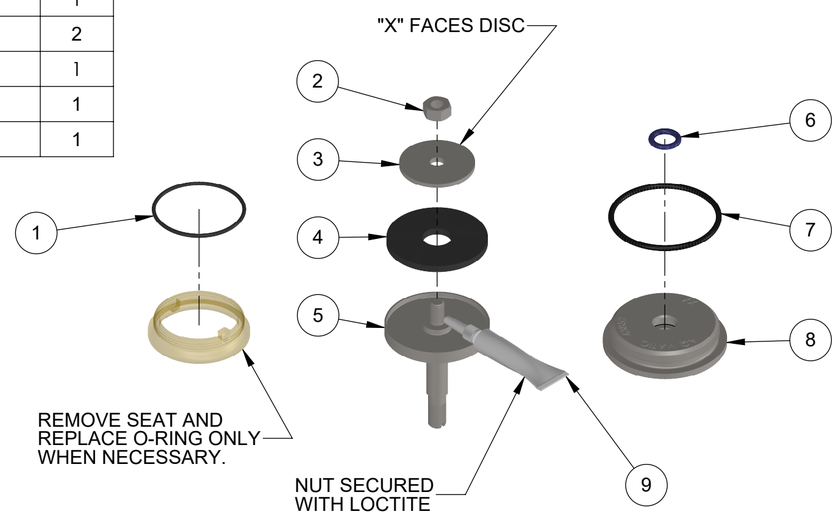


## STEP 2

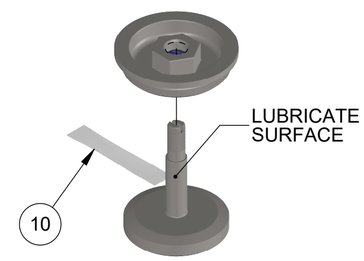


## STEP 3
(NOT NEEDED FOR MOST REPAIRS)

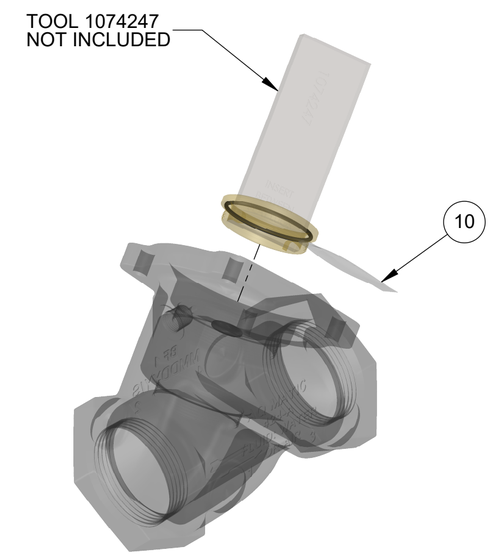


## STEP 4

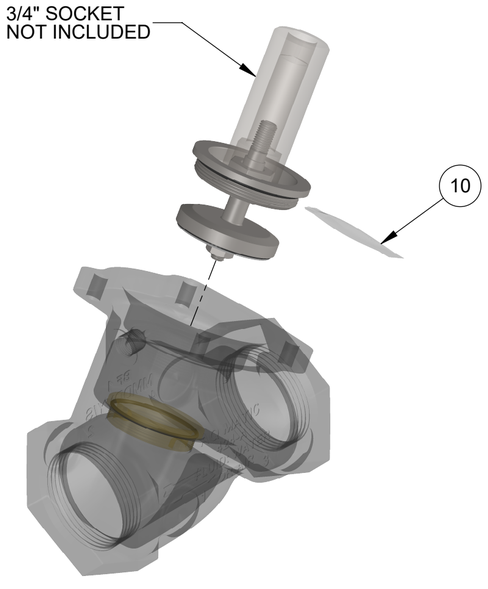


## STEP 5

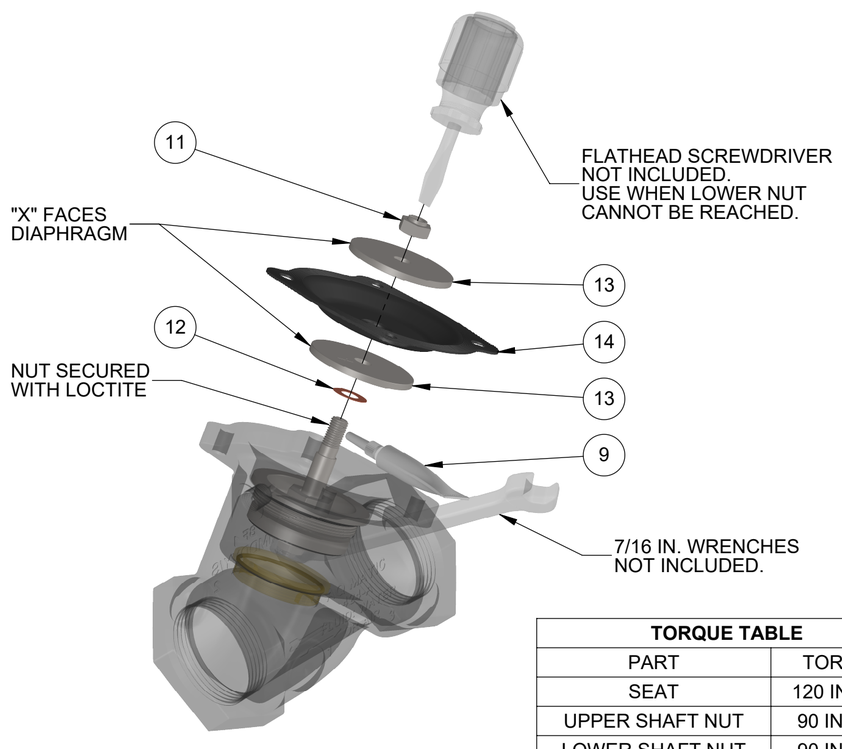


## STEP 6

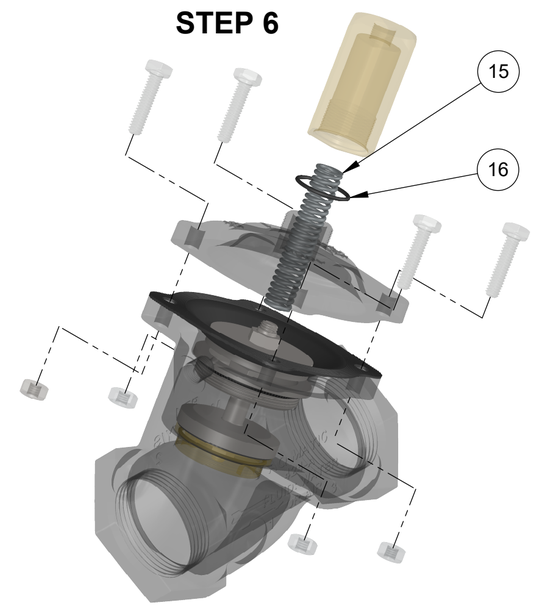


NOTES:

1. ALL O-RINGS MUST BE INSTALLED WITH 42561 SILICONE LUBRICANT.
2. ACTUAL TORQUE MAY BE WITHIN 10% OF NOMINAL VALUE IN TABLE.
3. PRIOR TO REV. C, KIT WAS CONTROLLED BY DRAWING NO. 1082527.

| TORQUE TABLE | |
|---|---|
| PART | TORQUE |
| SEAT | 120 IN.LBS. |
| UPPER SHAFT NUT | 90 IN.LBS. |
| LOWER SHAFT NUT | 90 IN.LBS. |
| SHAFT GUIDE | 120 IN.LBS. |
| CAP SCREWS & NUTS | 140 IN.LBS. |

INTERPRET DIMENSIONS AND TOLERANCES PER ASME Y14.5M -2018.

PRIMARY UNITS SHOWN IN INCHES.
SECONDARY UNITS SHOWN IN MILLIMETERS.

DEFAULT TOLERANCES:
ANGLES : ± 1°
1 PLACE .X: ± .100 [2.54]
2 PLACE .XX: ± .010 [0.3]
3 PLACE .XXX: ± .005 [0.13]

THIRD ANGLE PROJECTION

THE COMPONENT OR PRODUCT DESCRIBED IN THIS DOCUMENT MUST COMPLY WITH **RoHS 3 EU (EUROPEAN UNION) DIRECTIVE 2015/863** AND **EU REACH REGULATION (EC) 1907/2006**.

THIS DOCUMENT IS SOLELY THE PROPERTY OF AQ-MATIC REPRODUCTION, USE DISCLOSURE, OR TRANSMISSION OF THIS DOCUMENT OR DETAILS CONTAINED HEREIN, IN PART OR IN WHOLE, IS PROHIBITED WITHOUT THE WRITTEN CONSENT OF AQ-MATIC ENGINEERING. THIS DOCUMENT AND ANY COPIES SHALL BE RETURNED TO AQ-MATIC UPON WRITTEN REQUEST.

AQMATIC Valves & Controls

DESCRIPTION
KIT,424,INT,CUST

| DWG NO. | 1074255 | REV. | D |
|---|---|---|---|
| SIZE C | SCALE 1:2 | SHEET 1 OF 1 | |