4511031 SEAL AND DIAPHRAGM KIT ASSEMBLY INSTRUCTION MODEL NO. 424-RAF1031

ITEM NO.	PART NO.	MODEL	DESCRIPTION	QTY.
1	1071678	ORB-028	O-RING,-028,BUNA	1
2	1263852	NUS-0010	NUT,HEX,1/4-28,SS	1
3	43942	424-H	DIAPHRAGM PLATE	1
4	1074234	424-JH	DISC,424,HYCAR	1
5	44013-03	424-LE2	SHAFT ASMBLY,424,CUSTOM,LE	1
6	1071689	ORB-110TC	O-RING,-110,BUNA,TFL CTD	1
7	1071695	ORB-132	O-RING,-132,BUNA	1
8	43852	424-GGS	SHAFT GUIDE, 424, HEX	1
9	1262436	-	LOCTITE 565 POLYTUBE	1
10	42561	-	LUBRICANT,SILICONE,PACKET	1
11	1263853	RMET	HEX NUT 5/16" - 24	1
12	1074252	424-R	COPPER GASKET	1
13	43943	424-DS	DIAPHRAGM PLATE	2
14	1074222	424-FB	DIAPHRAGM,424,BUNA	1
15	1267398	524-S	SPRING, COMPRESSION,524/5524	1
16	1071677	ORB-025	O-RING,-025,BUNA	1

REVISIONS				
ECN	REV	DESCRIPTION	DATE	APPROVED
2436	A	INITIAL RELEASE	9/6/2024	PMJ

STEP 1
(WITH ONE PIECE SHAFT)

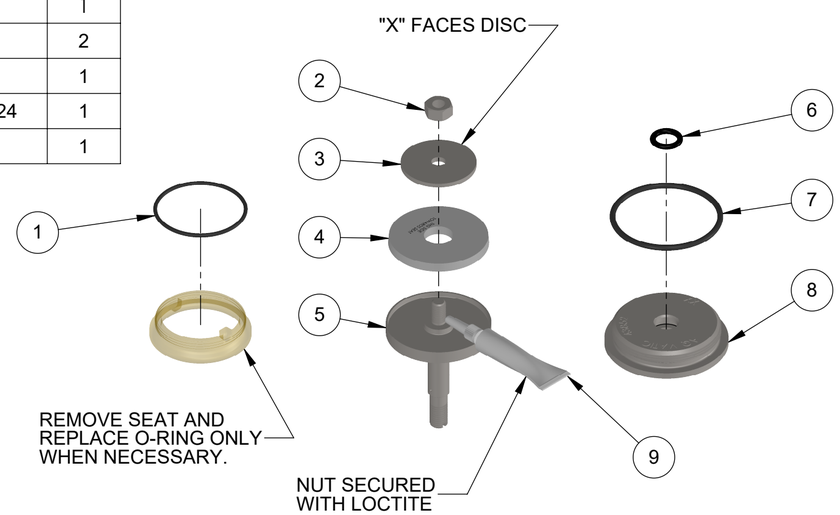

STEP 2

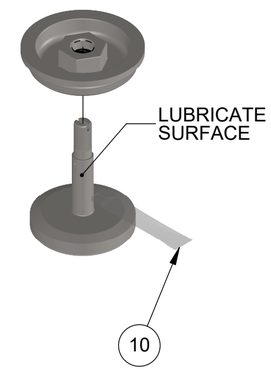

STEP 3
(NOT NEEDED FOR MOST REPAIRS)

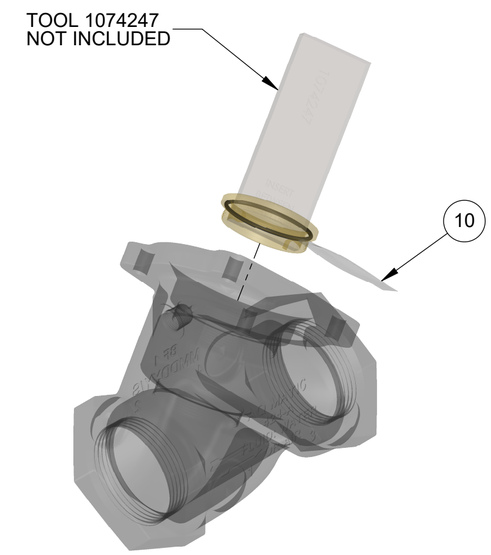

STEP 4

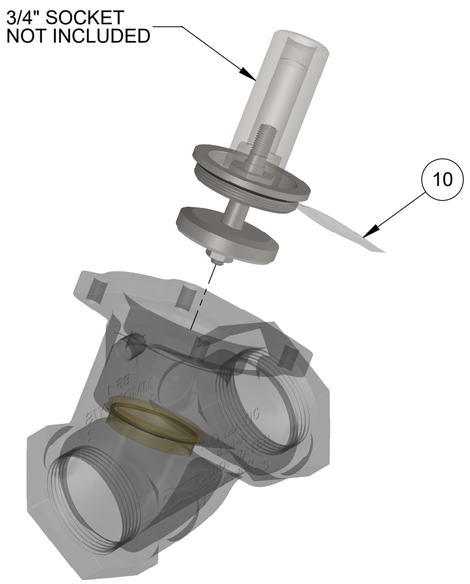

STEP 5

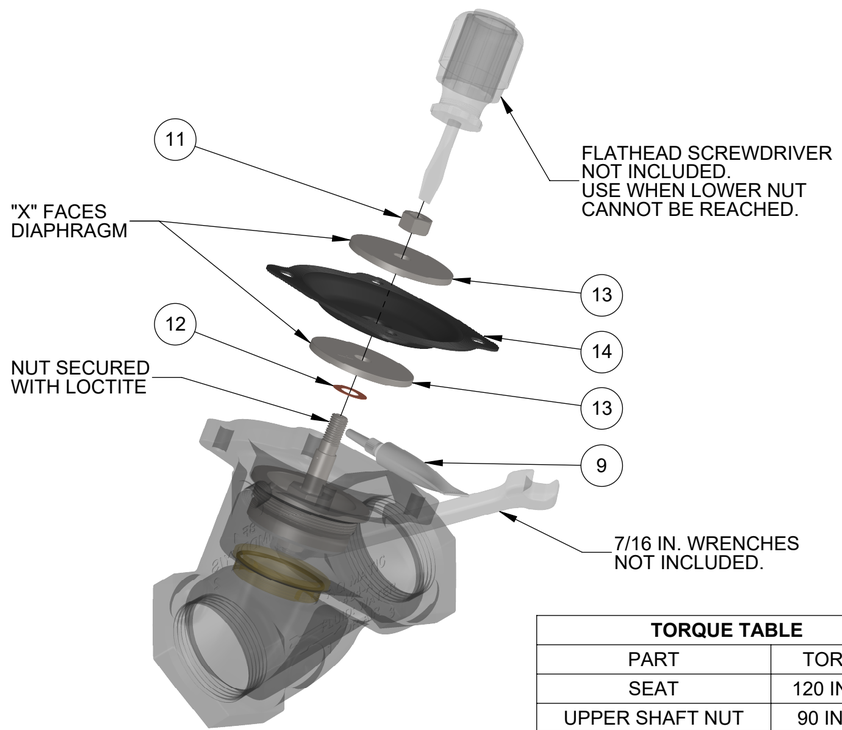

STEP 6

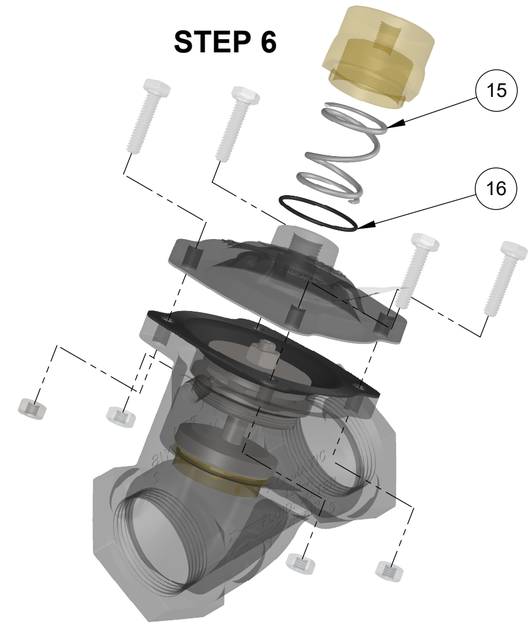

NOTES:

1. ALL O-RINGS MUST BE INSTALLED WITH 42561 SILICONE LUBRICANT.
2. ACTUAL TORQUE MAY BE WITHIN 10% OF NOMINAL VALUE IN TABLE.
3. LEGACY TWO PIECE SHAFT USES A COPPER GASKET BETWEEN SHAFT AND DISC HOLDER.

TORQUE TABLE	
PART	TORQUE
SEAT	120 IN.LBS.
UPPER SHAFT NUT	90 IN.LBS.
LOWER SHAFT NUT	90 IN.LBS.
SHAFT GUIDE	120 IN.LBS.
CAP SCREWS & NUTS	140 IN.LBS.

INTERPRET DIMENSIONS AND TOLERANCES PER ASME Y14.5M -2018.

PRIMARY UNITS SHOWN IN INCHES.
SECONDARY UNITS SHOWN IN MILLIMETERS.

DEFAULT TOLERANCES:
ANGLES : ± 1°
1 PLACE .X: ± .100 [2.54]
2 PLACE .XX: ± .010 [0.3]
3 PLACE .XXX: ± .005 [0.13]

THIRD ANGLE PROJECTION

THE COMPONENT OR PRODUCT DESCRIBED IN THIS DOCUMENT MUST COMPLY WITH **RoHS 3 EU (EUROPEAN UNION) DIRECTIVE 2015/863** AND **EU REACH REGULATION (EC) 1907/2006**.

THIS DOCUMENT IS SOLELY THE PROPERTY OF AQ-MATIC REPRODUCTION, USE DISCLOSURE, OR TRANSMISSION OF THIS DOCUMENT OR DETAILS CONTAINED HEREIN, IN PART OR IN WHOLE, IS PROHIBITED WITHOUT THE WRITTEN CONSENT OF AQ-MATIC ENGINEERING. THIS DOCUMENT AND ANY COPIES SHALL BE RETURNED TO AQ-MATIC UPON WRITTEN REQUEST.

AQMATIC Valves & Controls

DESCRIPTION
KIT,424,INT,CUST

DWG NO.	4511031	REV.	A
SIZE C	SCALE 1:2	SHEET 1 OF 1	